Nederman

Instruction Manual

EN CS DA DE ES ET FI FR HU IT NL PL SV TR RU

Oil Mist Filter

NOM 4

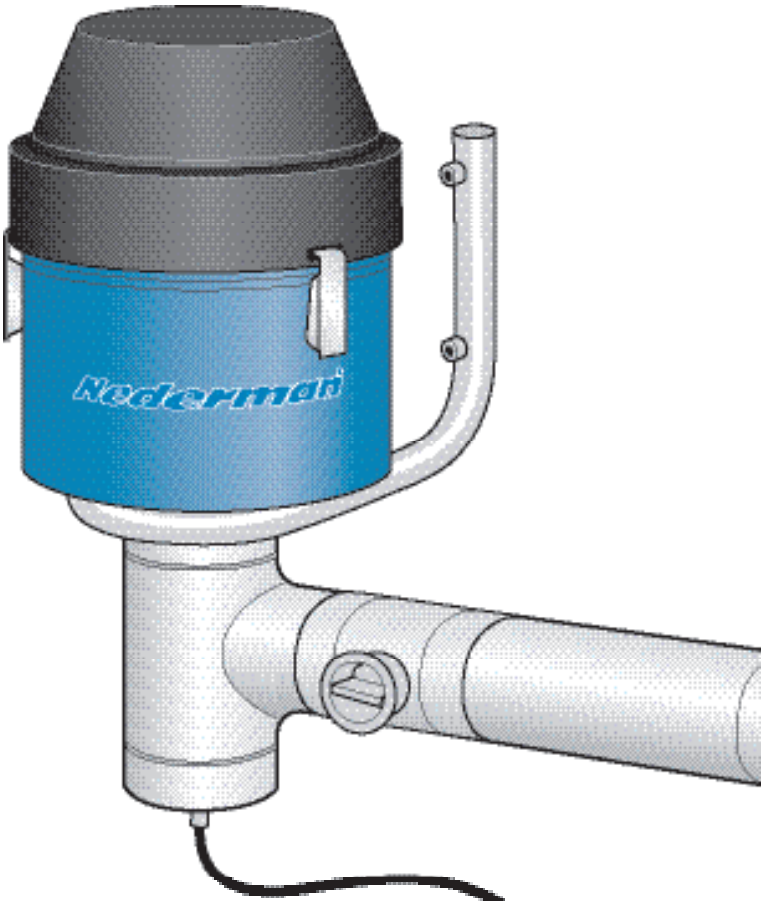

Original instruction manual

EN INSTRUCTION MANUAL

Translation of original instruction manual

CS NÁVOD K OBSLUZE
DA BRUGERVEJLEDNING
DE BEDIENUNGSANLEITUNG
ES MANUAL DE INSTRUCCIONES
ET KASUTUSJUHEND
FI KÄYTTÖOHJE
FR MANUEL D'INSTRUCTIONS
HU FELHASZNÁLÓI KÉZIKÖNYV
IT MANUALE D'ISTRUZIONI
NL HANDLEIDING
PL INSTRUKCJA UŻYTKOWANIA
SV INSTRUKTIONSMANUAL
TR İŞLETME KILAVUZU
RU РУКОВОДСТВО ПО ЭКСПЛУАТАЦИИ

2020-12-22 148501 (09)

Trace back information:
Workspace Main version a26
Checked in 2020-12-22
Skribenta version 5.4.004

Declaration of conformity 4
Figures 7
English 9
Český 13
Dansk 17
Deutch 21
Español 25
Eesti 30
Suomi 34
Français 38
Magyar 42
Italiano 46
Nederlands 50
Polski 55
Svenska 60
Türkçe 64
Русский 68

Declaration of conformity

EN English

Declaration of conformity
We, AB Ph. Nederman & Co., declare under our sole responsibility that the Nederman product:
NOM 4 (Part No. **, and stated versions of **) to which this declaration relates, is in conformity with all the relevant provisions of the following directives and standards:

Directives
2006/42/EC

Standards
SS-EN 60204-1:2018, EN ISO 12100:2010
The name and signature at the end of this document is the person responsible for both the declaration of conformity and the technical file.

CS Český

Prohlášení o shodě
My, společnost AB Ph. Nederman & Co., prohlašujeme na svou zodpovědnost, že výrobek Nederman:
NOM 4 (díl č. **, a uvedla, verze **), ke kterému se toto prohlášení vztahuje, je v souladu se všemi příslušnými ustanoveními následujících směrnic a norem:

Směrnice
2006/42/EC

Normy
SS-EN 60204-1:2018, EN ISO 12100:2010
Na konci tohoto dokumentu je jméno a podpis osoby zodpovědné za prohlášení o shodě a soubor technické dokumentace.

DA Dansk

Overensstemmelseserklæring
AB Ph. Nederman & Co., erklærer som eneansvarlige, at følgende produkt fra Nederman:
NOM 4 (Artikel nr. **, og erklærede versioner af **), som denne erklæring vedrører, er i overensstemmelse med alle de relevante bestemmelser i de følgende direktiver og standarder:

Direktiver
2006/42/EC

Standarder
SS-EN 60204-1:2018, EN ISO 12100:2010
Navnet og underskriften sidst i dette dokument tilhører den person, der er ansvarlig for såvel overensstemmelseserklæringen som den tekniske dokumentation.

DE Deutch

Konformitätserklärung
Wir, AB Ph. Nederman & Co., erklären in alleiniger Verantwortung, dass das Nederman Produkt:
NOM 4 (Art.-Nr. **, und bauartgleiche Versionen **), auf welches sich diese Erklärung bezieht, mit allen einschlägigen Bestimmungen der folgenden Richtlinien und Normen übereinstimmt:

Richtlinien
2006/42/EC

Standards
SS-EN 60204-1:2018, EN ISO 12100:2010
Der Name und die Unterschrift am Ende dieses Dokuments sind die für die Konformitätserklärung und die technischen Unterlagen verantwortlichen Personen.

ES Español

Declaración de Conformidad
Nosotros, AB Ph. Nederman & Co., declaramos bajo nuestra exclusiva responsabilidad que el producto de Nederman,
NOM 4 (Ref. n.º ** y las versiones indicadas de **), al que hace referencia esta declaración, cumple con todas las provisiones relevantes de las Directivas y normas que se indican a continuación:

Directivas
2006/42/EC

Normas
SS-EN 60204-1:2018, EN ISO 12100:2010
El nombre y firma que figuran al final de este documento corresponden a la persona responsable, tanto de la declaración como de la ficha técnica.

ET Eesti

Vastavusdeklaratsioon
Meie,AB Ph. Nederman & Co., kinnitame ja kanname ainuisikuliselt vastutust selle eest, et ettevõtte Nederman toode:
NOM 4 (artikkel nr **, ja märkis versioonid **), mida käesolev deklaratsioon puudutab, vastab kõigi järgnevate direktiivide ja standardite kohaldatavatele sätetele:

Direktiivid
2006/42/EC

Standardid
SS-EN 60204-1:2018, EN ISO 12100:2010
Dokumendi lõpus on nii vastavusdeklaratsiooni kui ka tehnilise toimiku eest vastutava isiku nimi ja allkiri.

FI Suomi

Vaatimustenmukaisuusvakuutus
Me, AB Ph. Nederman & Co., vakuutamme yksinomaan omalla vastuullamme, että Nederman tuote:
NOM 4 (tuotenro ** ja **:n määritetyt versiot), jota tämä vakuutus koskee, on seuraavien direktiivien ja standardien kaikkien sovellettavien määräysten mukainen:
Direktiivit
2006/42/EC
Standardit
SS-EN 60204-1:2018, EN ISO 12100:2010
Tämä asiakirjan lopussa oleva nimi ja allekirjoitus ovat henkilön, joka vastaa sekä vaatimuksenmukaisuusvakuutuksesta että teknisestä tiedostosta.

FR Français

Déclaration de conformité
Nous, AB Ph. Nederman & Co., déclarons sous notre seule responsabilité que le produit Nederman :
NOM 4 (réf. ** et versions indiquées de **) auquel fait référence la présente déclaration est en conformité avec toutes les dispositions applicables des directives et normes suivantes :
Directives
2006/42/EC
Normes
SS-EN 60204-1:2018, EN ISO 12100:2010
Le nom et la signature à la fin de ce document sont ceux de la personne responsable de la déclaration de conformité et du fichier technique.

HU Magyar

Megfelelőségi nyilatkozat
Az AB Ph. Nederman & Co. vállalat teljes felelőssége tudatában kijelenti, hogy a(z):
Nederman (cikkszám: **, és módosított verziói **) termék, amelyre ez a nyilatkozat vonatkozik, megfelel az alábbi irányelveknek és szabványoknak:
Irányelvek
2006/42/EC
Szabványok
SS-EN 60204-1:2018, EN ISO 12100:2010
A dokumentum végén található név és aláírás a megfelelőségi nyilatkozatért és a műszaki dokumentációért felelős személy neve és aláírása.

IT Italiano

Dichiarazione di conformità
AB Ph. Nederman & Co., dichiara sotto la propria esclusiva responsabilità che il prodotto Nederman:
NOM 4 (Art. N. **, e le versioni di detto **) al quale è relativa la presente dichiarazione, è conforme alle disposizioni delle seguenti direttive e normative:
Direttive
2006/42/EC
Normative
SS-EN 60204-1:2018, EN ISO 12100:2010
Il nome e la firma in calce al presente documento appartengono al responsabile della dichiarazione di conformità e della documentazione tecnica.

NL Nederlands

Conformiteitsverklaring
Wij ,AB Ph. Nederman & Co., verklaren onder onze verantwoordelijkheid dat het Nederman product:
NOM 4 (artikelnr. **, en vermelde uitvoeringen van **) waarop deze verklaring betrekking heeft, in overeenstemming is met alle relevante bepalingen van de volgende richtlijnen en normen:
Richtlijnen
2006/42/EC
Normen
SS-EN 60204-1:2018, EN ISO 12100:2010
Naam en handtekening onder dit document zijn van degene die verantwoordelijk is voor zowel de Verklaring van Overeenstemming als het technische document.

PL Polski

Deklaracja zgodności
My, AB Ph. Nederman & Co. niniejszym oświadczamy na naszą własną odpowiedzialność, że Nederman produkt:
NOM 4 [nr części ** oraz wskazane wersje **], który jest przedmiotem niniejszej deklaracji, spełnia wszystkie odpowiednie wymagania wymienionych niżej dyrektyw i norm:
Dyrektywy
2006/42/EC
Normy
SS-EN 60204-1:2018, EN ISO 12100:2010
Na końcu niniejszego dokumentu znajdują się imię i nazwisko oraz podpis osoby odpowiedzialnej za deklarację zgodności oraz dokumentację techniczną.

SV Svenska

Överensstämmelsedeklaration
Vi, AB Ph. Nederman & Co., förklarar under vårt fulla ansvar att Nederman-produkten:
NOM 4 (artikelnummer **, och angivna versioner av **) som denna deklaration avser, är i överensstämmelse med alla relevanta bestämmelser i följande direktiv och standarder:
Direktiv
2006/42/EC
Standarder
SS-EN 60204-1:2018, EN ISO 12100:2010
Namnet och signaturen i slutet av detta dokument är den person som ansvarar för både försäkran om överensstämmelse och den tekniska filen.

TR Türkçe

Uygunluk beyanı
AB Ph. Nederman & Co. olarak bu beyana konu olan Nederman (** Parça No ve belirtilen versiyonlarını **) NOM 4 ürününün şu direktif ve standartlarla alakalı tüm hükümlerle uyumlu olduğunu yalnızca kendi sorumluluğumuz altında beyan ederiz:
Direktifler
2006/42/EC
Standartlar
SS-EN 60204-1:2018, EN ISO 12100:2010
Bu belgenin sonundaki ad ve imzanın sahibi, uygunluk beyanı ile teknik dosyadan sorumlu kişidir.

RU Русский

Декларация о соответствии

Компания AB Ph. Nederman & Co. со всей ответственностью заявляет, что оборудование Nederman:
Nederman (№ по каталогу **, и заявил, версии **), к которому относится данная декларация, соответствует всем требуемым положениям следующих директив и стандартов.

Директивы

2006/42/EC

Стандарты

SS-EN 60204-1:2018, EN ISO 12100:2010

Сотрудник, поставивший свою подпись под данным документом, отвечает как за соблюдение декларации о соответствии, так и за достоверность технических данных.

**
12610368, 12610468, 12610568, 12610668, 12610168, 12610268, 12610768, 12610868, 12611668, 12611368, 12613068, 12613268, 12613168, 12613368

AB Ph. Nederman & Co.
P.O. Box 602
SE-251 06 Helsingborg
Sweden

Fredrik Hermann
Product Center Manager
Technical Product Management
2020-12-22

CE

Figures

1

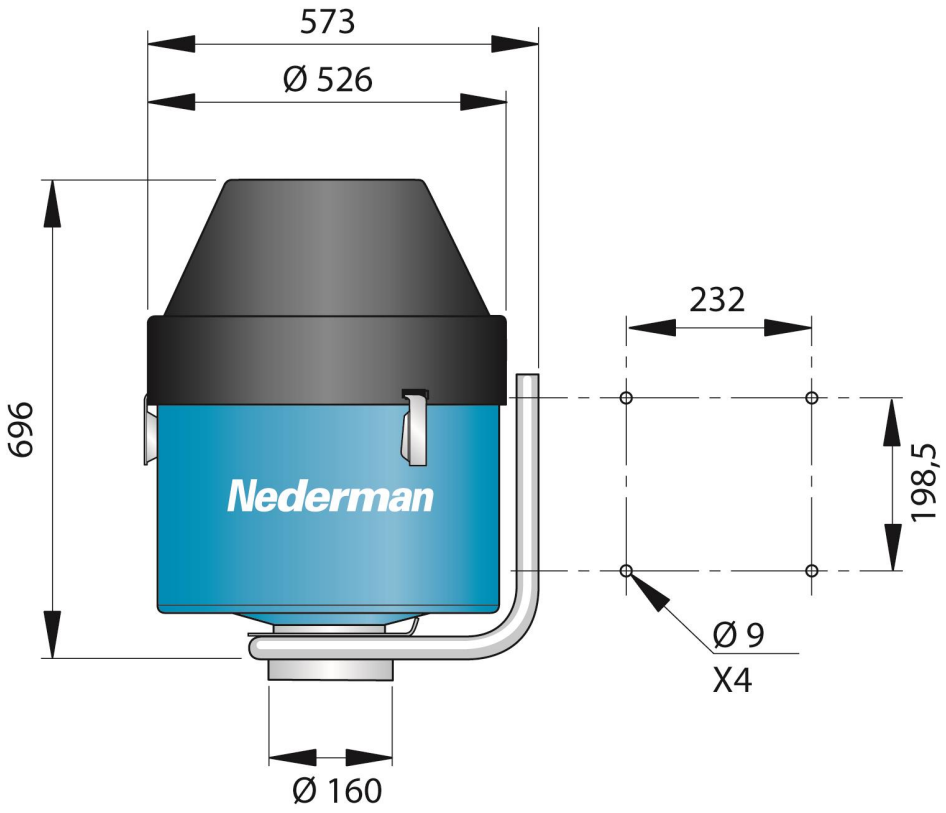

2

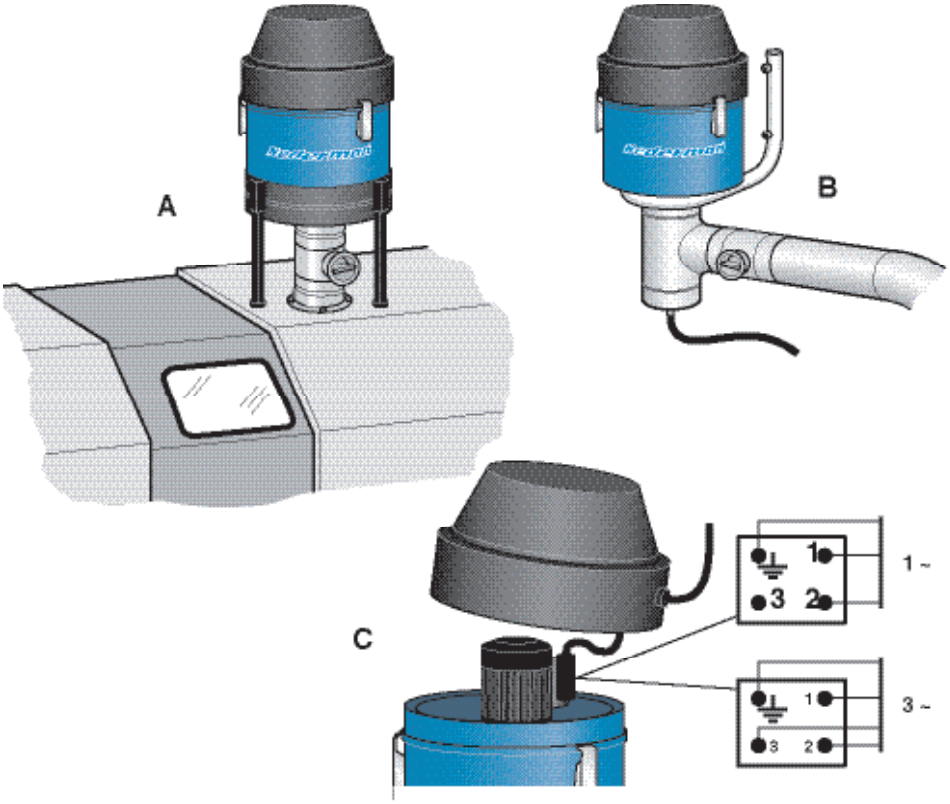

3

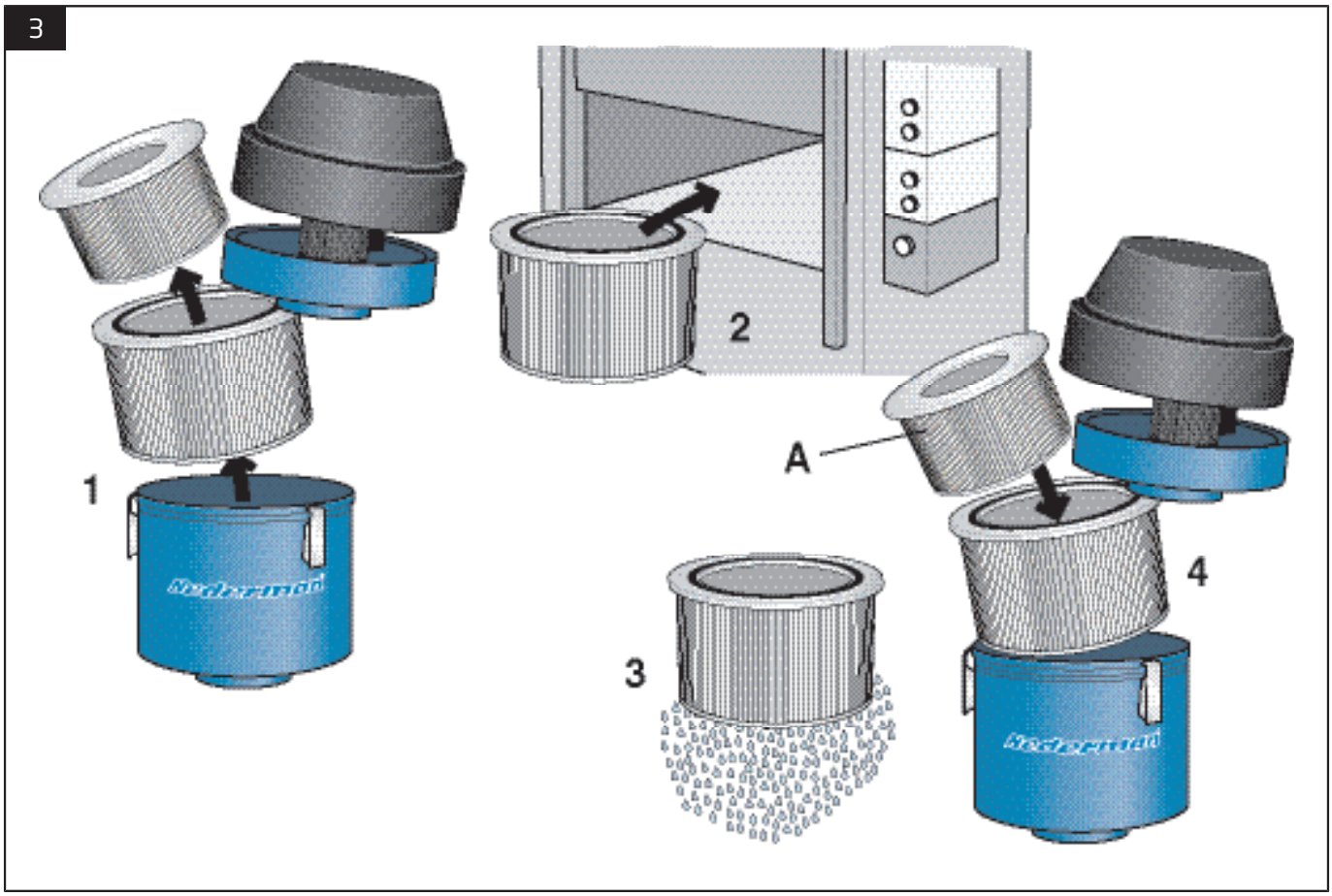

English EN
Instruction Manual

Table of contents

Figures 7

1 Preface 10

2 Safety 10
2.1 Classification of important information 10
2.2 General safety instructions 10

3 Description 10
3.1 Technical data 11
3.2 Dimensions 11
3.3 Area of application 11

4 Installation 11

5 Using NOM 4 12

6 Maintenance 12
6.1 Service instructions 12
6.1.1 Cleaning the pre-filter 12
6.1.2 Cleaning the drain pipe 12

7 Spare Parts 12
7.1 Ordering spare parts 12

8 Recycling 12

EN

1 Preface

Thank you for using a Nederman product!

The Nederman Group is a world-leading supplier and developer of products and solutions for the environmental technology sector. Our innovative products will filter, clean and recycle in the most demanding of environments. Nederman's products and solutions will help you improve your productivity, reduce costs and also reduce the impact on the environment from industrial processes.

Read all product documentation and the product identification plate carefully before installation, use, and service of this product. Replace documentation immediately if lost. Nederman reserves the right, without previous notice, to modify and improve its products including documentation.

This product is designed to meet the requirements of relevant EC directives. To maintain this status, all installation, maintenance, and repair is to be done by qualified personnel using only Nederman original spare parts and accessories. Contact the nearest authorized distributor or Nederman for advice on technical service and obtaining spare parts. If there are any damaged or missing parts when the product is delivered, notify the carrier and the local Nederman representative immediately.

2 Safety

2.1 Classification of important information

This document contains important information that is presented either as a warning, caution or note, according to the following examples:

WARNING! Risk of personal injury
Warnings indicate a potential hazard to the health and safety of personnel, and how that hazard may be avoided.

CAUTION! Risk of equipment damage
Cautions indicate a potential hazard to the product but not to personnel, and how that hazard may be avoided.

Notes contain other information that is important for personnel.

2.2 General safety instructions

For reasons of safety, this manual must be studied before using the product for the first time.

Never start the unit before installation is complete.

WARNING! Risk of eye injury
Always stop the unit before looking into the outlet. The pump rotates at high speed and even small particles of dust could severely damage the eyes.

WARNING! Risk of cutting injury
Ensure the dust collector is attached to the unit's inlet and the silencer attached to the outlet. Suction at the inlet is very powerful and any contact with the pump lobe could result in severe injury.

WARNING! Risk of personal injury
The belt guard must always be in place except during maintenance work on the transmission. Maintenance must be undertaken by qualified personnel. Refit the guard when the work is finished. The figures in this manual without the guard in place are for illustration purposes only and do not imply that the unit ever is to be run without the guard.

WARNING! Risk of electric shock
The thermal switches in the unit must always be enabled. Switch off and lock the mains maintenance switch or remove the mains fuses before starting the maintenance.

WARNING! Risk of burn injury
The exhaust air and pipes, motor, pump and silencer will sometimes get very hot.

CAUTION! Risk of equipment damage
The dust collector must be positioned before the vacuum unit and be designed and maintained to prevent coarse particles and dust from being sucked into the pump. Filtering of fine dust should be sufficient to prevent undue wear to the pump. The unit must be stopped immediately for inspection by suitably qualified personnel if the pump rotates unevenly, or if damage to the pump or its bearings is suspected.

3 Description

3.1 Technical data

Table 3.1 Technical data

Filtration efficiency:	
• without HEPA-filter	>90%
• with HEPA-filter	>99.97%
Operating temperature	5-60 °C
Max airflow	400 m^3/h
Filter area:	
• pre-filter	3 m^2
• HEPA-filter	5.5 m^2
Power	0.37 kW
Voltage, rpm	See the type label
Frequency	50 or 60 Hz
Phase	1 ~/3 ~
Safety class	IP 55
Noise level	66.1 dB(A) *
Weight	29 kg
Material recycling	69% of weight

* Measured according to ISO 11202

3.2 Dimensions

See Figure 1.

3.3 Area of application

The filter must only be used with oil vapour. Other applications must be referred to the manufacturer. Should materials containing graphite, lead or chrome be used, the filters may have to be replaced more frequently.

⚠ **WARNING! Risk of fire or explosion**
Do not use the filter unit to separate explosive or fire dangerous substances.

4 Installation

See Figure 2.

1 Ensure the filter unit is not damaged during transport.

2 Mount the filter unit with an assembly set (including a damper) on a wall- or a machine.
- Mounting on the machine, see Figure 2A.
- Wall-mounting, see Figure 2B. Ensure that suitable fixing bolts are used and that they are secure. The bolts must each stand a torque force of minimum 720 N.

3 Put the cable from the main system through the cable passage in the top cover and connect it to the fan motor connection box. 1-phase or 3-phase connection. See Figure 2C and the type label of the product.

Units intended for use with more voltages than one are configured for the highest voltage at delivery. Ensure that the motor terminals are configured for the supply voltage. See the inside of the fan motor connection box lid for details.

4 Install a NOM 4 fan starter or fit a lockable safety switch on the mains connection cable.

EN

WARNING! Risk of electric shock
All electrical work must be done by a qualified electrician according to local regulations.

5 Using NOM 4

1 Start the fan unit and ensure that the impeller rotation is correct. Refer to the rotation sticker on the fan motor. If the impeller rotation is incorrect, change two phases (makes no difference which) with each other (should be done by a qualified electrician).
2 Ensure that the filter cartridges are not damaged.
3 Open the damper approximately 1/3 from closed position (marked 60°), or if a pressure gauge is installed, act according to the following steps:
   - Loosen the lower hose to the pressure gauge.
   - Turn the damper handle until the pressure gauge shows 700 Pa.
   - Remount the hose.
4 After some time in operation, open the damper if needed.

6 Maintenance

Installation, repair and maintenance work is to be carried out by qualified personnel using only original Nederman spare parts. Contact your nearest authorized distributor or Nederman for advice on technical service.

WARNING! Risk of personal injury
Use necessary personal safety equipment when servicing the filter unit, especially when cleaning or replacing the filter cartridges.

6.1 Service instructions

See Figure 3.

If the damper is fully open and the airflow through the filter is still too low, it is necessary to clean and/or replace the filters.

If a pressure gauge (accessory) is installed, take measures according to the following description:

- The pre-filter should be cleaned when the pressure on the gauge is 600 Pa. If the pressure still is 600 Pa when the pre-filter has been cleaned the HEPA-filter should be changed

WARNING! Risk of personal injury
Switch off the fan.

1 Switch off the fan.
2 Loosen the eccentric locks on the top cover.
3 Remove the top cover.
4 Use the quick coupling to loosen the main cable from the motor.
5 Take out the fan.
6 Clean the pre-filter and, if necessary, change the HEPA-filter, see Figure 3A.

6.1.1 Cleaning the pre-filter

Wash from above with water-based degreasing. Maximum 60 °C. No high washing pressure. For example a chamber washer 5–6 times/filter. Let the filter dry before it is replaced.

6.1.2 Cleaning the drain pipe

Wallmounted filter unit

When small metal particles contaminate the oil reservoir it is necessary to ensure that the drain pipe does not become clogged.

7 Spare Parts

CAUTION! Risk of equipment damage
Use only Nederman original spare parts and accessories.

Contact your nearest authorized distributor or Nederman for advice on technical service or if you require help with spare parts. See also www.nederman.com.

7.1 Ordering spare parts

When ordering spare parts always state the following:

- The part number and control number (see the product identification plate).
- Detail number and name of the spare part (see www.nederman.com/en/service/spare-part-search).
- Quantity of the parts required.

8 Recycling

The product has been designed for component materials to be recycled. Different material types must be handled according to relevant local regulations. Contact the distributor or Nederman if uncertainties arise when scrapping the product at the end of its service life.