Hot Wire Strip Heater 500 / 920 and 600/1000/1500 S /D Range of Hot Wire Strip Heaters

Table of Contents

1. Introduction

Your new machine is designed to locally heat thermoplastic sheet materials of thicknesses between (typically) 0.5mm and 6.0mm.

The machine operates by heating a thin (0.9mm) diameter resistance wire, which is located in a channel beneath the material. The wire sits approximately 4mm below the material, and there is no contact between wire and work.

The heating wire is powered from a toroidal transformer and operates at approximately 10 volts. The wire is guarded to prevent accidental touching of the heated part.

A calibrated scale on each side of the working area assists the operator with both alignment and measurement of the bend position.

2. Health & Safety Information

General

This Hot Wire Strip Heater is designed for the heating of thermoplastic materials of between 0.5mm (0.020”) and 6.0mm (0.250”). The machine should not be used for the heating of any other materials.

Further Information

Should you wish to know more about the Health and Safety of this product, relevant publications are available from the following organisations:

School Science Service
Brunel University
Uxbridge
UB8 3PH
UK

Publishers of	“Risk Assessment for Technology in Secondary Schools”

British Standards Institute
389 Chiswick High Road
London
W4 4AL

Publishers of BS4163:2000	“Health & Safety for Design & Technology in Schools and similar establishments - Code of Practice”

3. Machine Parts & Functions

Your new machine will reach you fully assembled. Carefully unpack the machine and check for any signs of transit damage. These should be reported to the manufacturer or their distributor within three days of receipt.

Machine Parts (Refer also to Diagram 2 below)

1.	Mains Cable Socket (On Rear of Machine)	Connect the Mains Cable into the IEC Socket
2.	Mains Available Neon	Illuminates when the machine is connected to the electrical supply.
3.	Mains On / Off Switch	I = On O = Off
4.	Circuit Breaker Primary	Protects against overload - pops out when tripped Push in to Reset
5.	Circuit Breaker Secondary	Protects against overload - pops out when tripped Push in to Reset

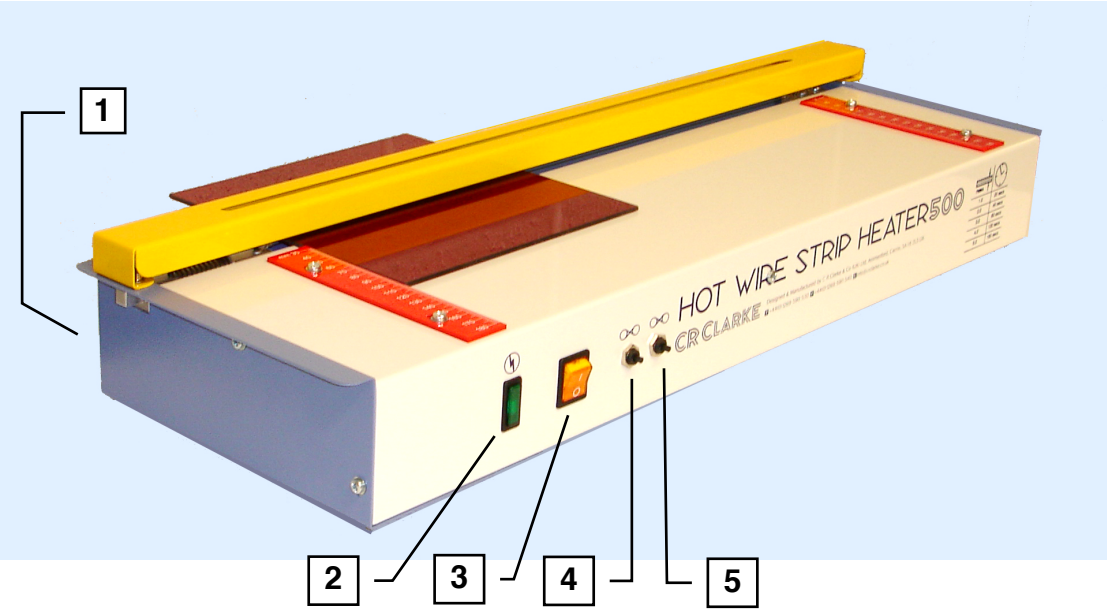

4. Electrical Supply & Connection

The electrical specification of your new machine is as follows:-

	500	920
Voltage (230V machines)	220/240AC 50-60Hz	
Voltage (115V machines)	110/120AC 50-60Hz	
Current 230V machines)	0.32A	0.6A
Current (115V machines)	0.64A	1.2A
Watts (max)	75W	144W

Electrical supply to the machine must be in accordance with the details shown on the rating label. As the colours of the wires in this mains lead may not correspond with the coloured markings identified in your plug appliance, should the plug need to be changed proceed as follows:-

The wire that is coloured green and yellow must be connected to the terminal that is marked with the letter E or by the earth symbol or coloured green and yellow or green.

The wire that is coloured blue must be connected to the terminal that is marked with the letter N or coloured blue or black.

The wire that is coloured brown must be connected to the terminal that is marked with the letter L or coloured brown or red.

Should there be any queries regarding the electrical requirements of this product please refer back to the manufacturer or their nominated distributor.

5. Connection Diagram – 500/920

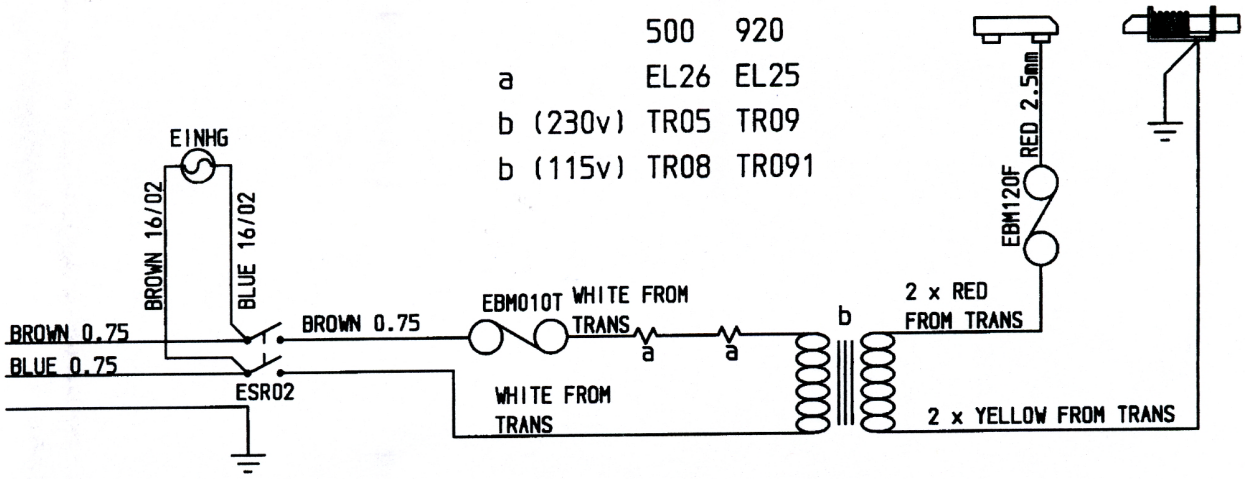

6. Machine Operation

1. Load the Material by sliding it beneath the guard.

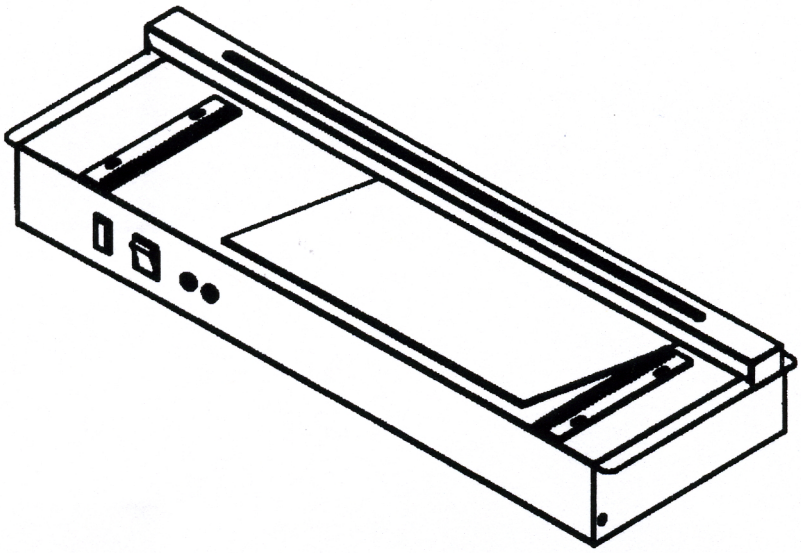

2. Adjust the material to the required position using the calibrated scales or by viewing down through the slot in the guard. Switch on the machine and heat material until flexible.

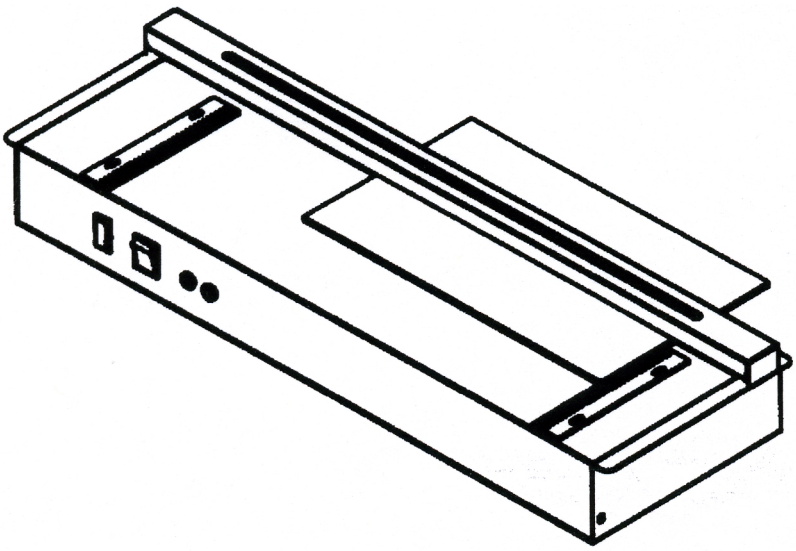

3. Remove the material from the machine.

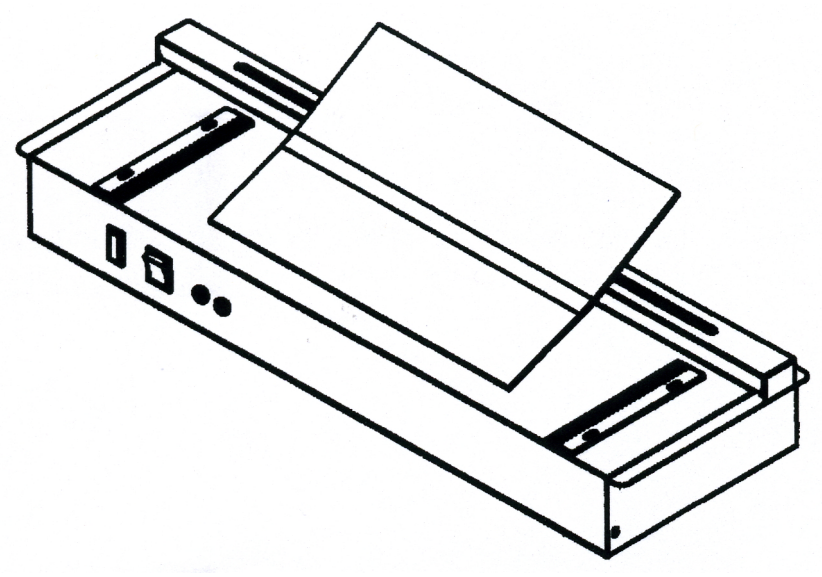

4. Fold by hand or into a cooling jig and allow to cool.

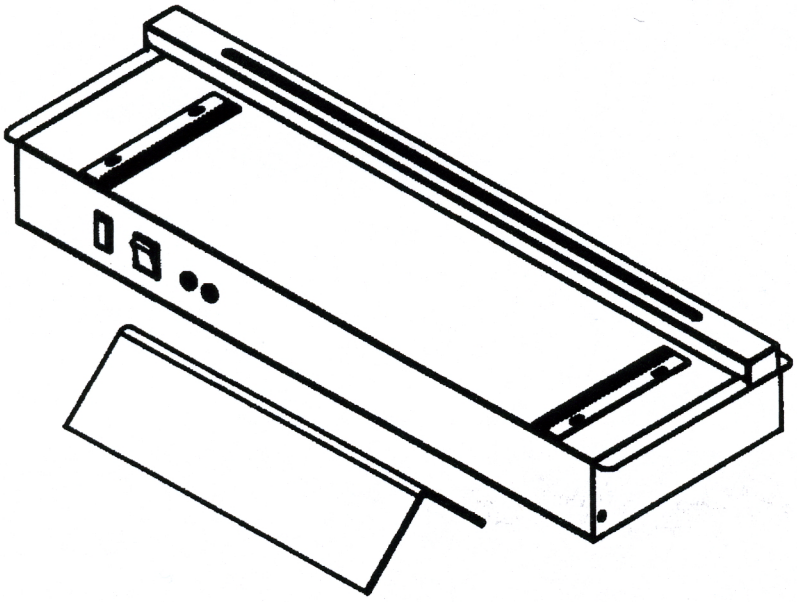

7. Maintenance

Changing a Heating Wire

Disconnect the machine from the electrical supply.
Remove the four guard securing screws (1), and lift the guard off.
Push in the tensioning bar (3). On newer machines, the heating wire may be secured by M4 screws. In this case, remove the screw with the tensioner held in. Older machines have angled pins to hold the wire. For these machines, simply lift off the heating wire.
At the other end, remove the screw if required and lift off wire (4).
Fitting of the new wire is a reversal of this process.

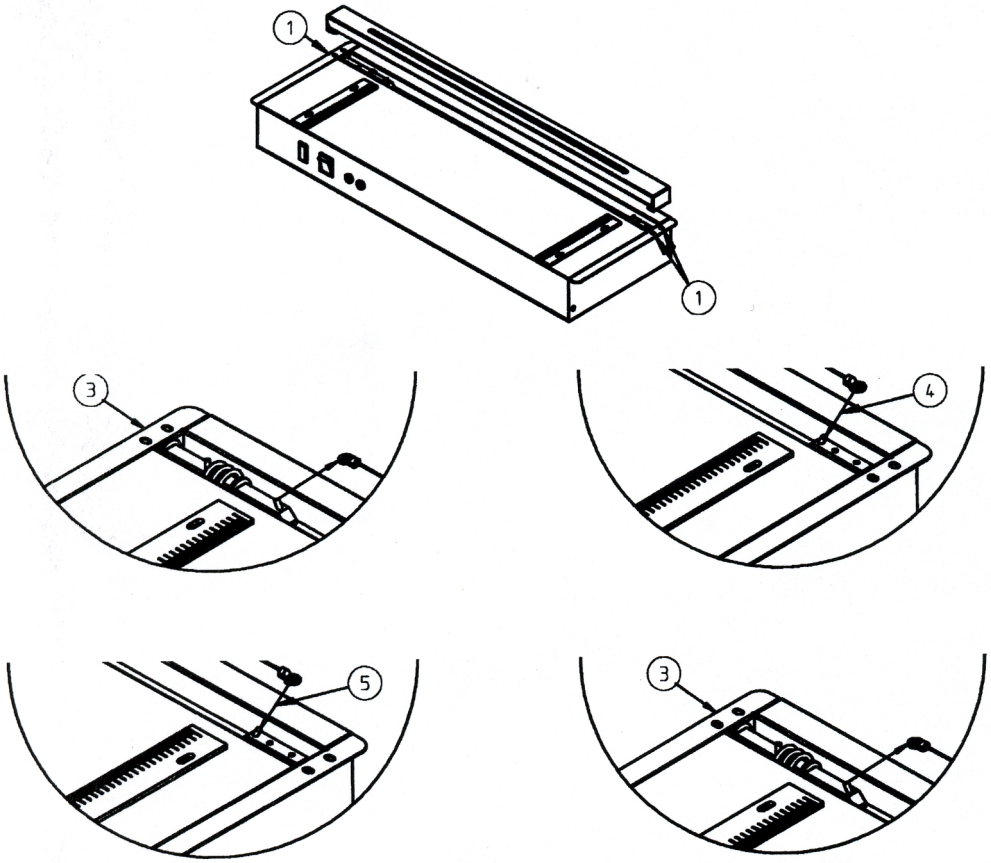

Note: during manufacture, washers may be fitted onto the wire locating pins to adjust the wire height. If fitted, these should be left in position below the heating wire terminals.
Replacement Wire Part Numbers are as follows:

	500	**920**
Part No	500/95	920/95

Please retain these instructions for future reference. Should there be any other problems or queries regarding your machine please refer back to the manufacturer or their nominated distributor.

Operating & Maintenance Instructions

600/1000/1500 S and D Range of Hot Wire Strip Heaters

Table of Contents

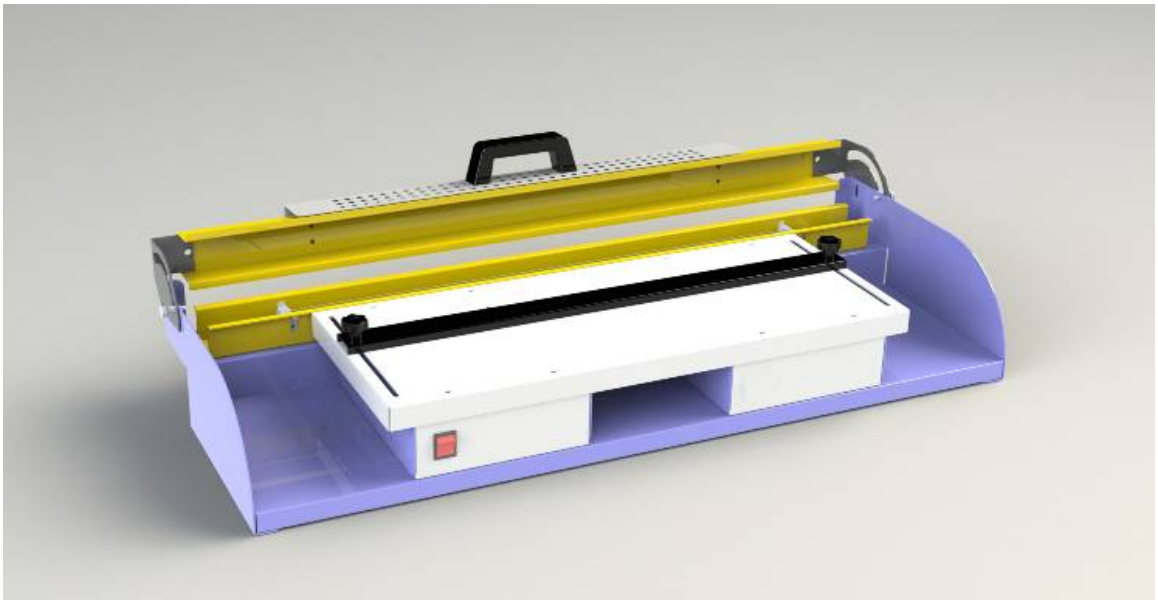

1. Purpose

This range of Hot Wire Strip Heaters provides a quick and efficient solution for the local heating of thermoplastic sheets of up to 12mm (1/2”) in thickness. It uses single sided (600S,1000S and 1500S) or double sided (600D, 1000D and 1500D) multiple wire heating. A piece of thermoplastic material is loaded onto the table of the machine and the guard is closed. This action switches on the heating wires. The material is heated until it has softened. The time to soften will vary depending upon the type and thickness of material. Once soft, the guard is opened and the material removed and formed by hand or in a jig to the required shape.

2. Health & Safety Information

The heater beams of these Strip Heaters can get hot in operation. Therefore, protective gloves and long sleeves should be worn to prevent local burns.

Always switch the machine off at the Mains Switch before carrying out any adjustments.

These machines are intended to be used for the heating of thermoformable thermoplastic materials only. Only heat materials from known sources. If in doubt please refer to the Material Safety Data Sheet or contact the manufacturer or their local representative before processing on the machine.

Never leave the machine unattended while it is heating material.

Should there be any specific queries regarding Health and Safety or any other aspects of your machine please contact the manufacturer or their appointed local distributor.

3. Unpacking & Location

Your new machine will reach you complete and ready to use. Upon receipt proceed as follows:

Unpack the machine.

Check for any signs of transit damage. All damages must be reported within 3 days of receipt.

Position the machine as required. It is recommended that two people carry and position the machine. Lift the machine at either end of the main body. Do not lift the machine with the cover open. Do not lift the machine by the cover.

Connect the mains lead to the rear of the machine.

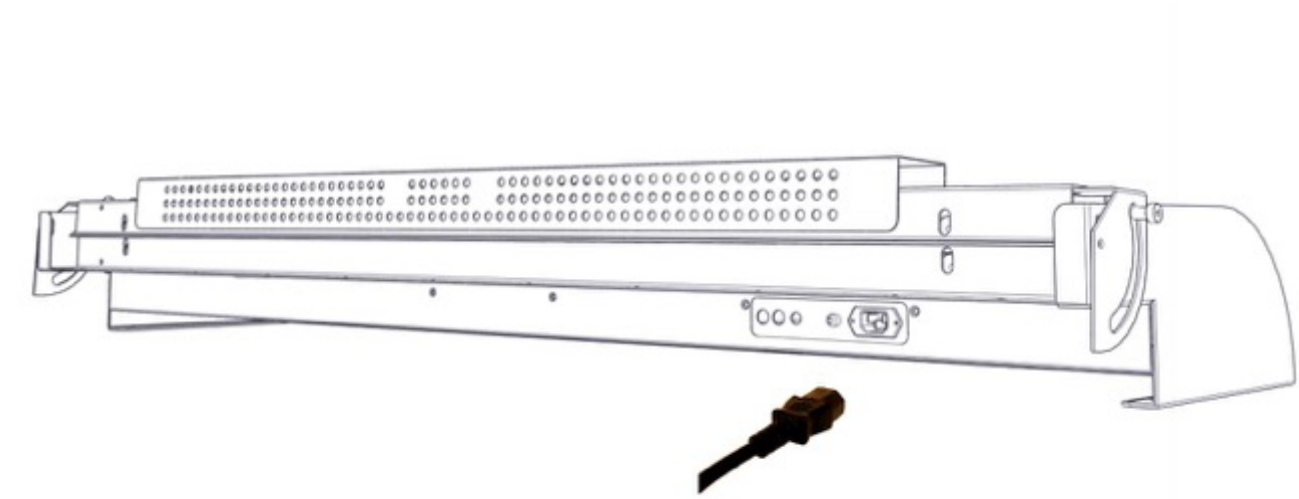

600S/1000S/1500S

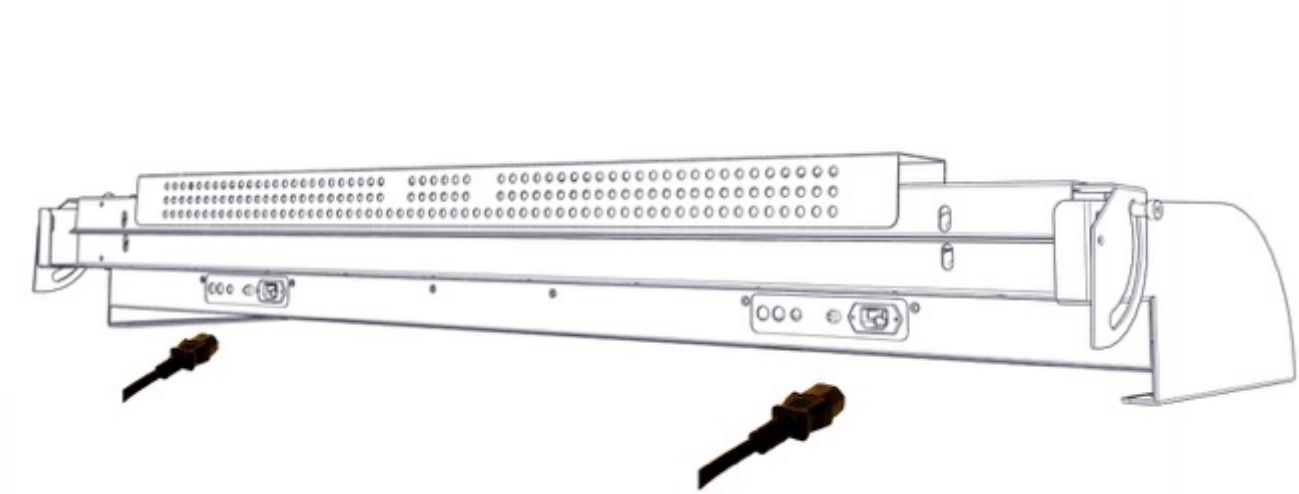

600D/1000D/1500D

4. Electrical Supply & Connection

The electrical specification of your new machine is as follows:-

230V Machines

	600S	600D	1000S	1000D	1500S	1500D
Voltage	220-240V	220-240V	220-240V	220-240V	220-240V	220-240V
Current	1A	2A	2A	4A	3A	6A
Watts (Max)	230	460	460	920	690	1380

115V Machines

	600S	600D	1000S	1000D	1500S	1500D
Voltage	110-120V	110-120V	110-120V	110-120V	110-120V	110-120V
Current	2A	4A	4A	8A	6A	12A
Watts (Max)	230	460	460	920	690	1380

Electrical supply to the machine must be in accordance with the details shown on the rating label. As the colours of the wires in this mains lead may not correspond with the coloured markings identified in your plug appliance, should the plug need to be changed proceed as follows: -

Standard Specification

The wire that is coloured green and yellow must be connected to the terminal that is marked with the letter E or by the earth symbol or coloured green and yellow or green.
The wire that is coloured blue must be connected to the terminal that is marked with the letter N or coloured blue or black.
The wire that is coloured brown must be connected to the terminal that is marked with the letter L or coloured brown or red.

North American Specification

230V

The wire that is coloured green must be connected to the terminal that is marked with the letter E or by the earth symbol or coloured green and yellow or green.
The wires that are coloured black and white must be connected to the silver coloured terminals. Polarity is unimportant.

115V

The wire that is coloured green must be connected to the terminal that is marked with the letter E or by the earth symbol or coloured green and yellow or green.
The live wire is coloured black and must be connected to the Live terminal.
The neutral wire is coloured white and must be connected to the Neutral terminal.

Should there be any queries regarding the electrical requirements of your machine please refer back to the manufacturer or their nominated distributor.

5. Machine Controls

All machine controls are located on the front control panel. Switches illuminate to indicate that wires are powered.

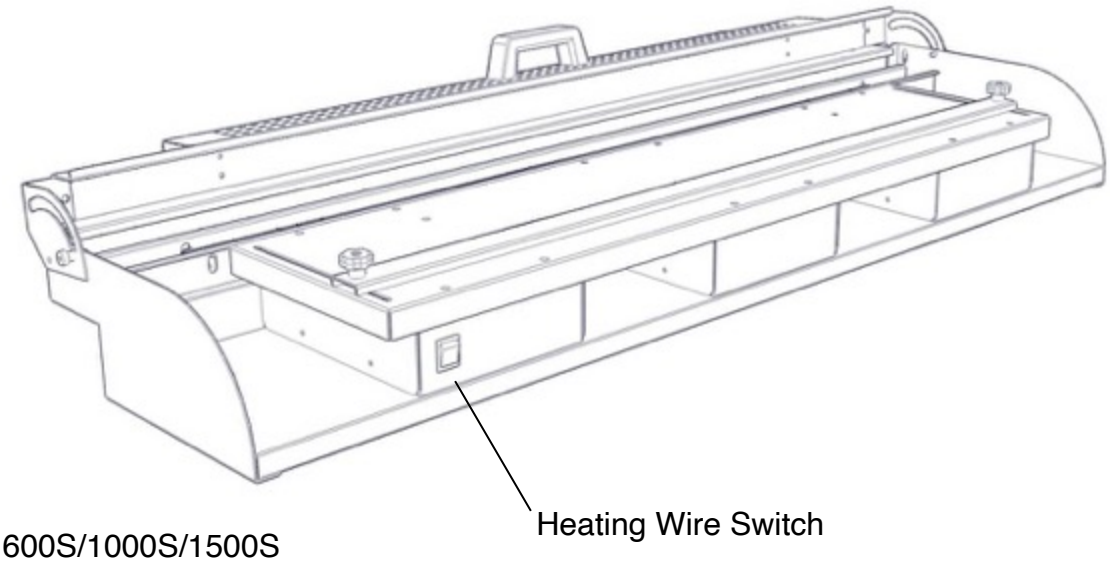

600S/1000S/1500S

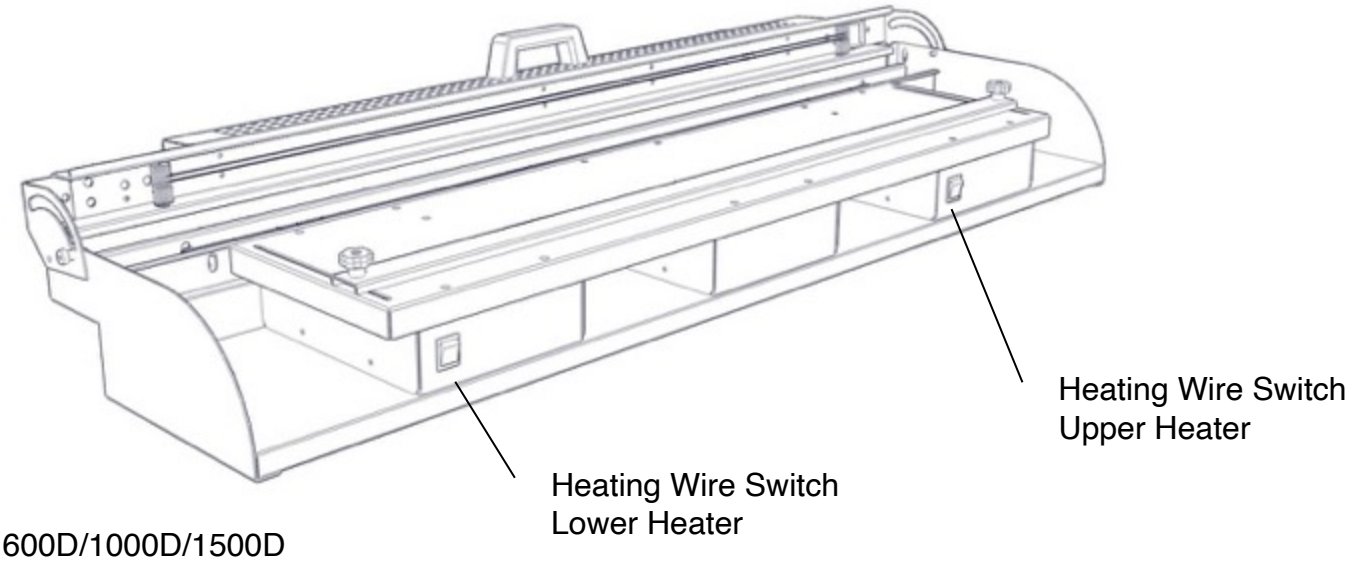

600D/1000D/1500D

Please note that machines are also fitted with safety switches to disconnect the heating wires while the clamp is open. The wires will switch on automatically when the clamp is lowered.

6. Producing a Bend

Ensure that the machine is connected as detailed in Sections 4.

1. Disconnect machine from the electrical supply. Set the required wire height at both ends of the Heater Beam

2. Set the wires into the appropriate grooves of the guides at each end of the heater beams. Should only one wire be required, the other one can be removed. See Section 7.

Note that the heating wires will be hot for around 30 seconds after switching the machine off.

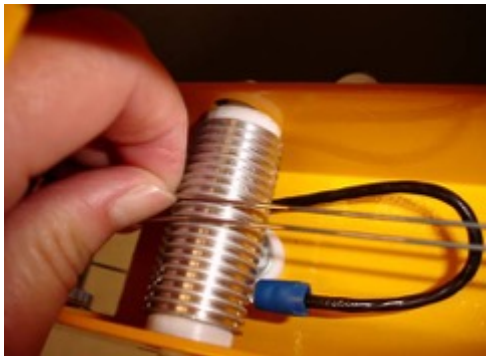

3. Set the Workstop to the correct position. The calibrated strips can be used as a guide.

4. Switch the machine on.

5. Load material and close clamp. Lift clamp periodically to check if material is ready for folding. When the material is ready, remove from machine, fold and allow to cool.

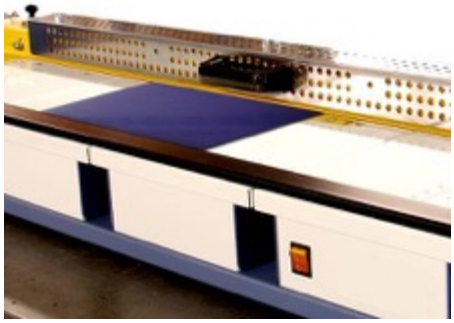

7. Removing and Changing Heating Wires

1. Disconnect the machine from the electrical supply.

2. At rear of machine, unhook the spring from the wire you wish to remove.

3. Remove wire from the machine.

4. To replace wire, make new heating wire with twisted loops in each end.

5. Hook wire over fixed wire post.

6. Feed wire around roller and attach spring

7. Attach spring and hook onto spring post.

8. Adjust wire into correct groove of wire guide.

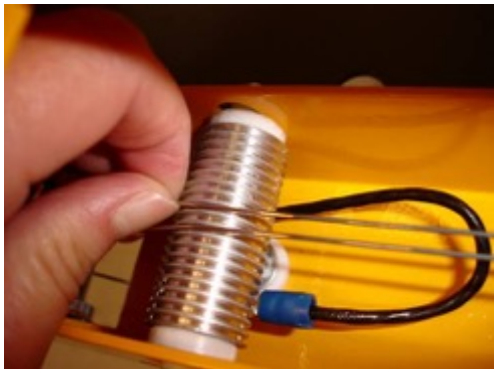

8. Maintenance

Your new Strip Heater requires very little in the way of routine maintenance. Periodically ensure that external electrical connections are in good order. Clean the wire guides with a soft wire brush. Heating wires should be changed should they break or become too stretched. They should be replaced only with 20SWG 80/20 Ni-Chrome wire (C R Clarke Part Number WX02). Wires should be made up according to the following diagram.

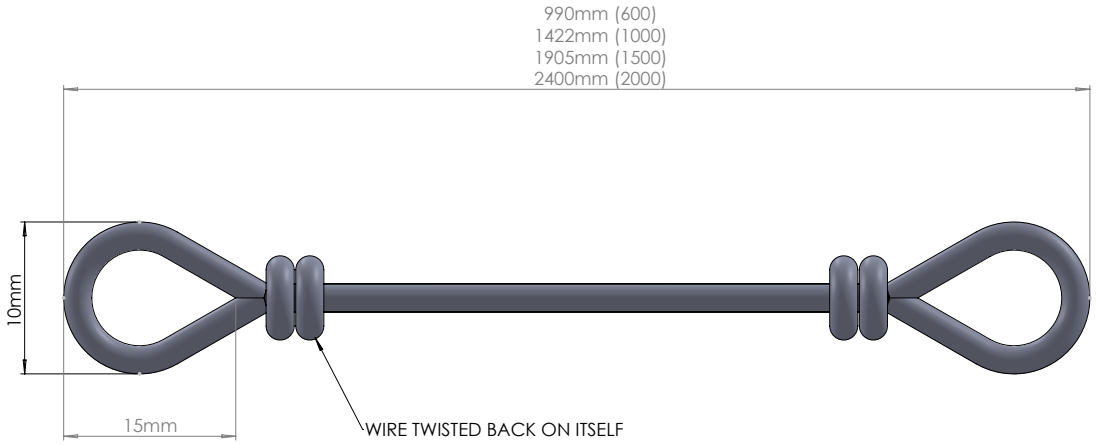

Should you have any queries regarding the maintenance of your machine, please refer back to the manufacturer or local distributor.

9. Connection Diagram