Creating Safer Workplaces

AD Universal

Advantage

The AD Universal fume extraction and filtration system has been designed to provide cost effective solutions for light to medium duty applications. These compact systems are ideal for small scale industrial environments and light laser coding applications.

STANDARD FEATURES:

- Digital speed control
- Filter condition indicator
- Long life, low cost replacement filters
- DeepPleat pre filter
- Advanced Carbon Filter technology
- Low noise level
- Small footprint

OPTIONAL FEATURES:

- VOC gas sensor (Volatile Organic Compound)
- Remote stop / start interface
- Filter change / System fail signal

The compact system designed for small scale industrial environments and light laser coding applications.

Featuring optional DeepPleat filter technology

Featuring Advanced Carbon Filter technology

TYPICAL APPLICATIONS:

- Lasering
- Welding
- Coding
- Cutting
- Marking
- Drilling
- Engraving

PART NUMBERS

Model	Voltage	Part No.	24V Stop / Start	Filter change / System failure signal	VOC Monitoring
AD Universal Powder Coated	115V - 230V	L2244A	A2001	A2002	A2003

REPLACEMENT FILTERS

Model	DeepPleat Pre Filter	Combined filter
AD Universal	A1030167	A1030166

TECHNICAL DATA

	230V	115V
Dimensions (HxWxD)	625 x 355 x 520 mm	24.6 x 14 x 20.5”
Cabinet Construction	Powder coated mild steel	Powder coated mild steel
Airflow / Pressure	380m^3/hr / 96mbar	223cfm / 96mbar
Electrical Data	90 - 257v 1ph 50/60Hz Full load current: 12.5 amps/ 1.1kw	
Noise Level	< 60dBA*	< 60dBA*
Weight	50kgs	110lbs
Approvals	CE	UL

* At typical operating speed.

DEEPPLEAT PRE FILTER SPECIFICATIONS

Surface Media Area	6m² approx
Filter Media	Glass Fibre
Filter Media Construction	100mm Maxi Fold construction with Webbing Spacers
Filter Efficiency	F8 (95% @ 0.9 microns)

COMBINED FILTER SPECIFICATIONS

HEPA Filter Media	Glass Fibre
HEPA Media Construction	50mm Maxi Fold construction with Webbing Spacers
Filter Housing	Zintec Mild Steel
Treated Activated Carbon	11kgs
Filter Efficiency	99.997% @ 0.3 microns

AIRFLOW THROUGH FILTERS

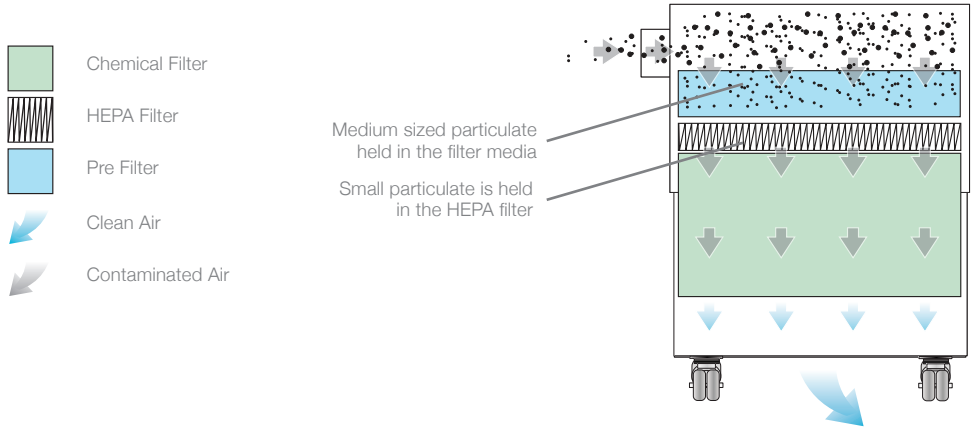

TECHNICAL SPECIFICATION

1 Digital Speed Control
2 On / Off Switch
3 Filter Condition Display
4 IEC Power Cable Inlet
5 Lid Fastening Latches
6 Handles
7 Hose Inlet Connections - 75mm
8 Motor Cooling Inlet
9 Castors
10 Signal / Interface Cable
11 Exhaust Outlet

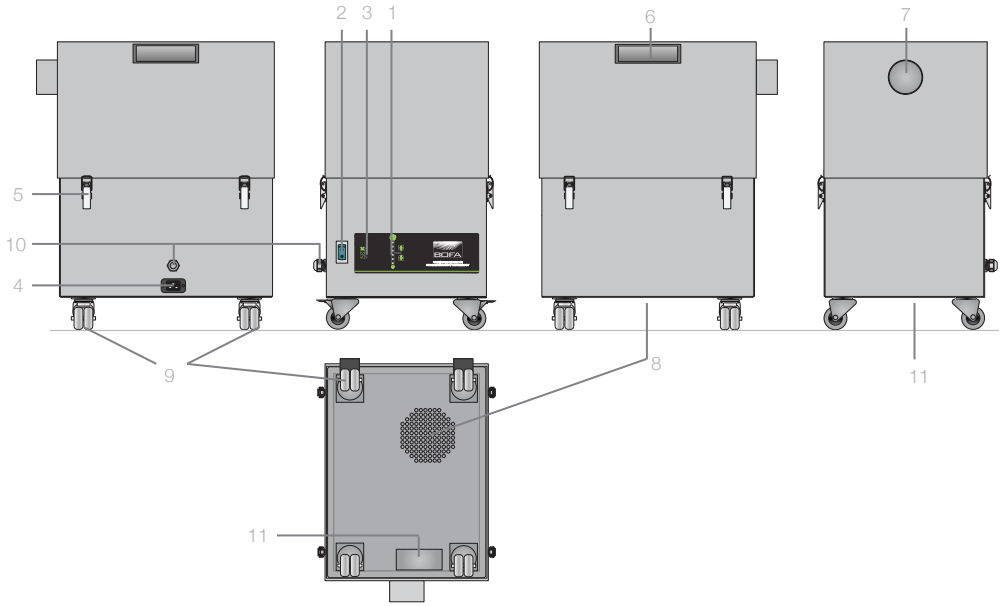

Other hose kits and filters are available. All of the above units are fitted with our standard filter combinations. For specific applications please call us for details. Replacement filters should always be ordered using the part number on the filters inside your extractor to ensure the correct filter is ordered. Datasheet correct at time of print.

Date:27/2/13 V:2

aes Creating Safer Workplaces

Tel: 0141 892 6690

Fax: 0141 883 6439

Web: aessolutions.co.uk

Email: info@aessolutions.co.uk

British Quality